Southeast Asian Fisheries Development Center **Aquaculture Department**

SEAFDEC/AQD Institutional Repository **http://repository.seafdec.org.ph**

Institutional Reports Quarterly Research Reports

1978

Ferrocement buoys for mussel culture

Tolosa, R. T.

Aquaculture Department, Southeast Asian Fisheries Development Center

Tolosa, R. T. (1978). Ferrocement buoys for mussel culture. SEAFDEC Aquaculture Department Quarterly Research Report, 2(3), 22-25.

http://hdl.handle.net/10862/2327

Downloaded from http://repository.seafdec.org.ph, SEAFDEC/AQD's Institutional Repository

Ferrocement buoys for mussel culture

R. T. Tolosa

One aspect of the project is the design and development of an effective flotation system to be used in the culture of the green mussel, *Mytilus smaragdinus.*

In the Philippines there are several methods of mussel farming. The two most commonly employed are the Stake and Hanging Methods. However, there are two disadvantages to these. One is that they rely too much on the use of bamboo, often prone to attacks by marine borers and rots easily. Another disadvantage is that the methods are applicable only to areas of limited depths usually controlled by the length of bamboo poles, the ease of driving them to the ground and seabed foundation. This paper presents an alternative method of culturing mussels using ferrocement buoys.

In designing a suitable system for the culture of the green mussel, the following factors were considered and served as bases for its development:

1. The system can be used in areas where the seabed is not suitable to the traditional methods of mussel farming;
2. The system should provide for control of predators to insure less loss of stock;
3. The system should employ materials that have anti-fouling properties; and
4. The system should employ materials that are durable and resistant to marine borers and rot.

The nominal dimensions of the first prototype buoy are 0.60 x 1.50 m. It is cylindrical in shape and capped with hemispheroidal ends. It is provided with ears at both ends for mooring purposes and for connecting with other buoys (Fig. 1).

The buoy was moored at sea and allowed to float for one week to determine its performance. Observations indicated that its performance was satisfactory with regards to buoyancy, impermeability and durability.

To improve the design of the buoy the following revisions were made:

1. The net buoyant capacity of the buoy was increased to 350 kg;
2. The length of the buoy was shortened to 1.0 m;
3. The diameter of the buoy was increased to allow for the changes in nos. 1 and 2;
4. Finer wire meshes were used for the inner and outer layers of reinforcements. It was observed that mortar was deposited inside the buoy during plastering; and
5. The hemispheroidal ends of the buoy were deleted. It was observed that forming the steel bars and wire mesh to obtain the curved surface at the ends was a very tedious process.

The experimental system is composed of three ferrocement buoys arranged and connected as shown in Fig. 2. The buoys are spaced at about 5 to 6 meters and are tied with polypropylene ropes through the ears. On these ropes are hung collectors for settling and growing mussels spats. The ends of the collectors are fastened to concrete blocks to hold them taut.

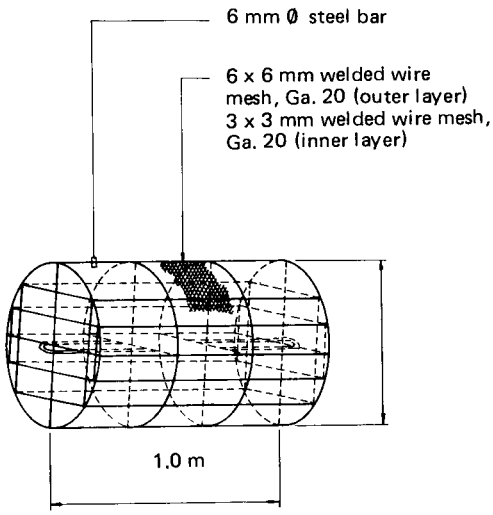

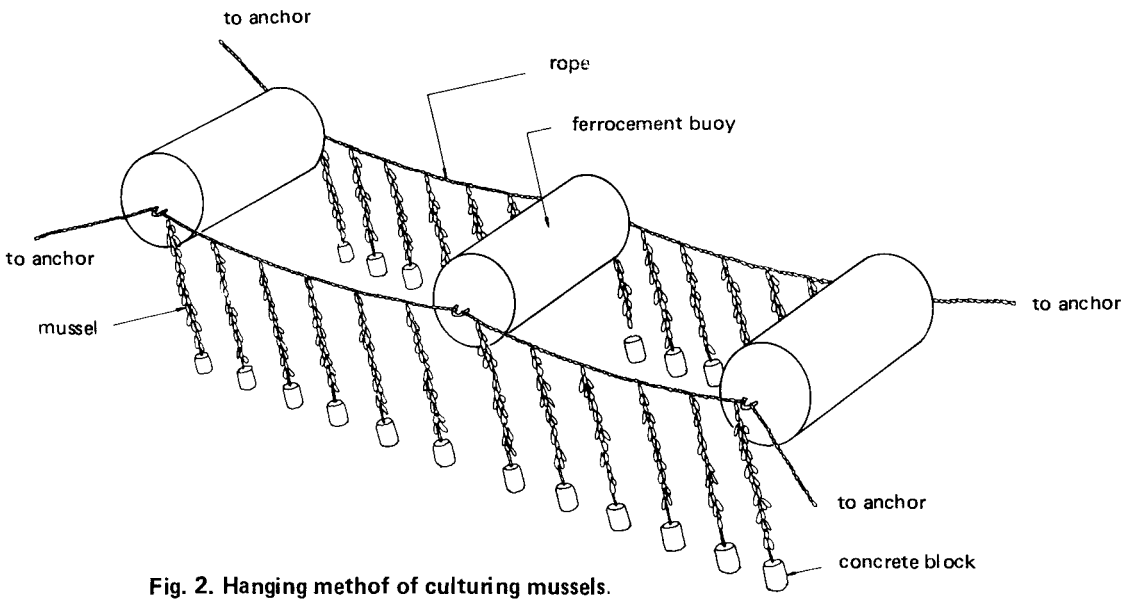

Fig. 2. Hanging methof of culturing mussels.

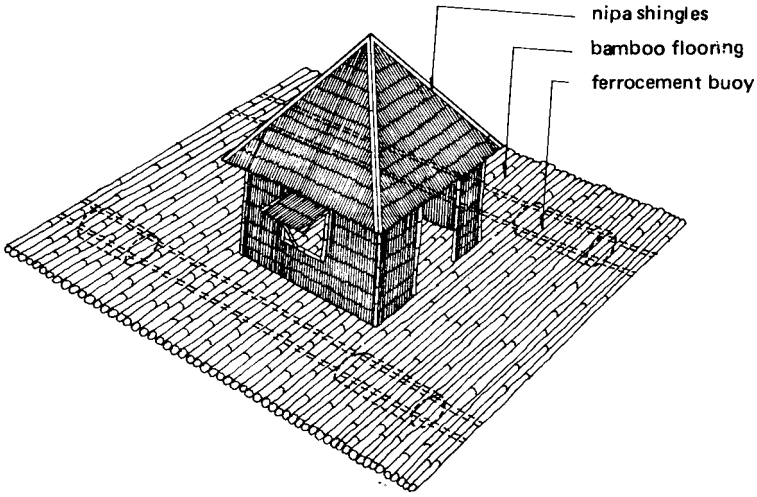

The buoys may be used in the construction of a raft house. The raft house serves as guardhouse and storage for feeds and other equipment used in the culture of mussels. Fig. 3 shows a typical arrangement of a raft house made of bamboo.

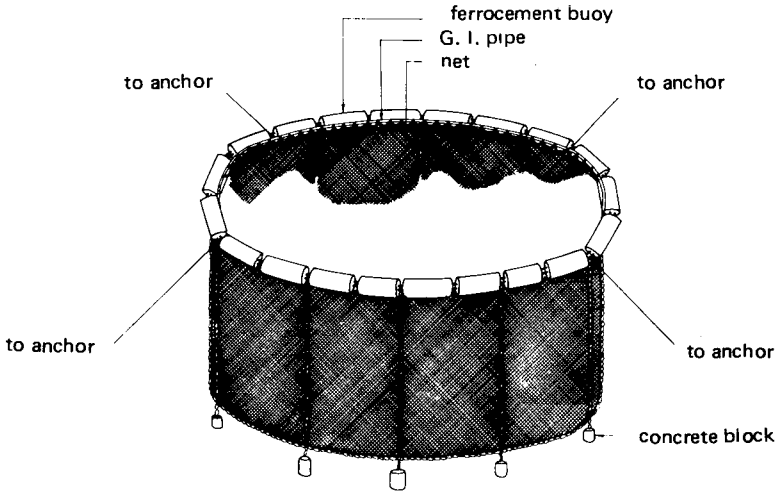

Another application is in providing a floation system for nets and cages, moored in sheltered areas. Cylindrical nets, 10 to 20 m in diameter and 3 to 5 m deep, are suspended from a circular ring of ferrocement buoys. The bottom edge of the net is lined with concrete blocks to hold it in place and to keep its shape. Nine of these circular cages could be linked together to form a square configuration and provided with catwalks for easy access to the individual cages. Fig. 4 shows a typical floating cage.

REFERENCES

Yap, W. G. *et al.* "Seafdec Aquaculture Department; Mussel Research Program-First Progress Report." Unpublished, mimeographed, 1976.

Milne, P. H. "Fish and Shellfish Farming in Coastal Waters," Fishing News (Books) Ltd., 1972.

Korringa, P. "Farming Marine Organisms Low in the Food Chain," Elsevier Scientific Publishing Co., 1976.

Fyson, J., ed. "FAO Investigates Ferrocement Fishing Craft," Fishing News (Books) Ltd., 1973.